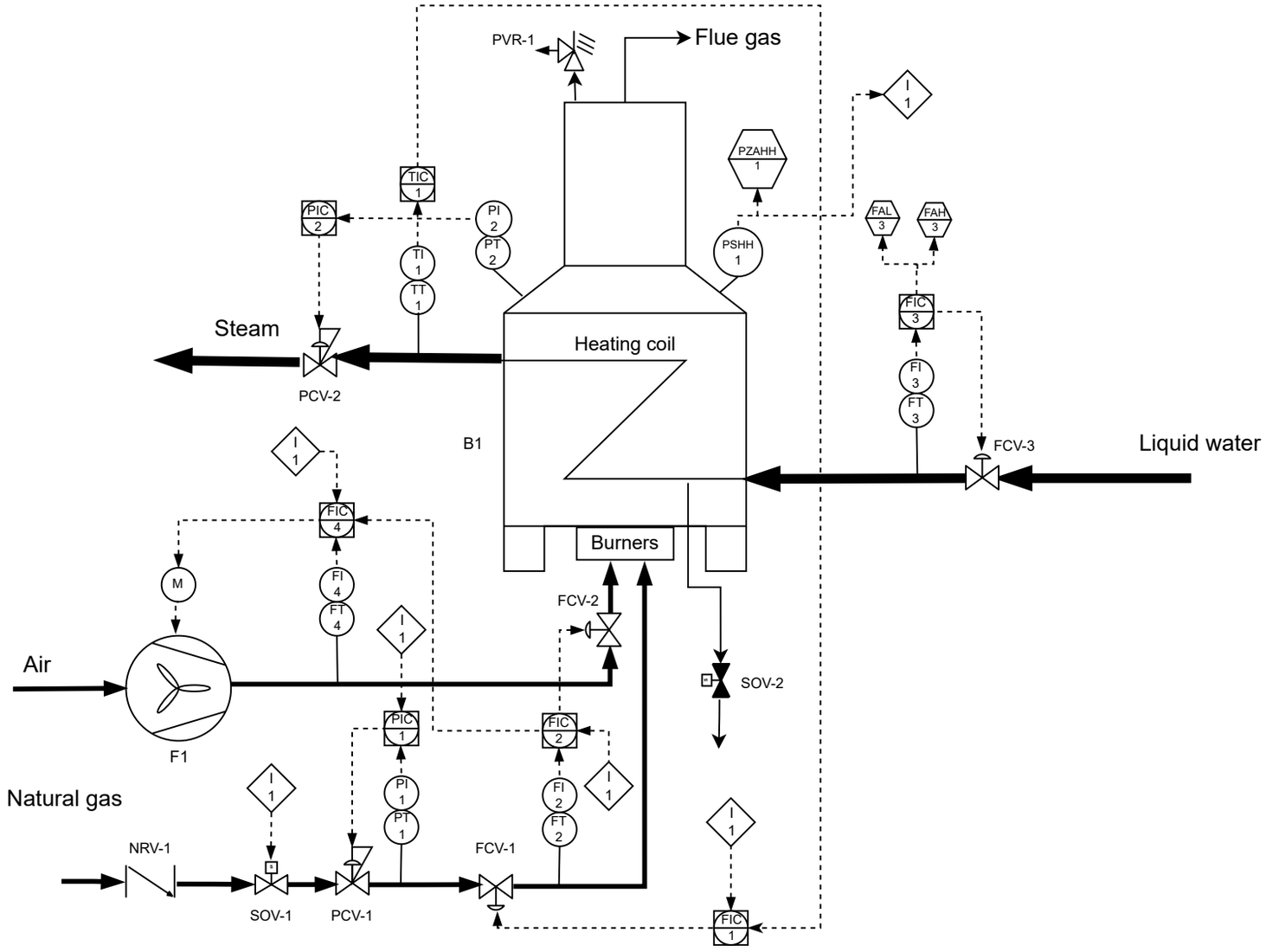

Equipment tag	B1	F1
Description	Boiler	Centrifugal Fan
Material of construction	316 Stainless Steel	316 Stainless Steel
Design pressure (atm)	10	5
Design temperature (°C)	200	60
Capacity	1 m^3/h	10 m^3/h

Legend

- Main process stream
- Utility stream
- Drainage stream
- Electrical signal
- Control valve
- Pressure regulating valve
- Solenoid valve
- Gate valve (normaly opened)
- Pressure relief valve
- Three way valve
- No-return (Check) valve
- Valve (normaly closed)
- Instrument in field
- Controller system
- Interlock
- Alarm

ID for Instruments

Letter	First	Second	Third
A		Alarm	
C		Control	Controller
F	Flow		
H			High
I	Interlock	Indicator	
L	Level		Low
M	Motor		
N	Non-return		
P	Pressure		
R		Relief	
S	Solenoid	Switch	
T	Temperature		
V	Valve	Valve	Valve
Y		Multiplier	
Z		Interlock	

EPFL

P&ID description:

Steam production with natural gas boiler

Drawn by MJ - 05/05/2022