# Mock exam 2
# PHYS-101(en)
# 3 December 2024

## Problem booklet

## Problems

Problem 1 – 8 points – page 3
Problem 2 – 8 points – page 4

THIS PAGE IS INTENTIONALLY LEFT BLANK

# 1. Spring and loop (8 points)

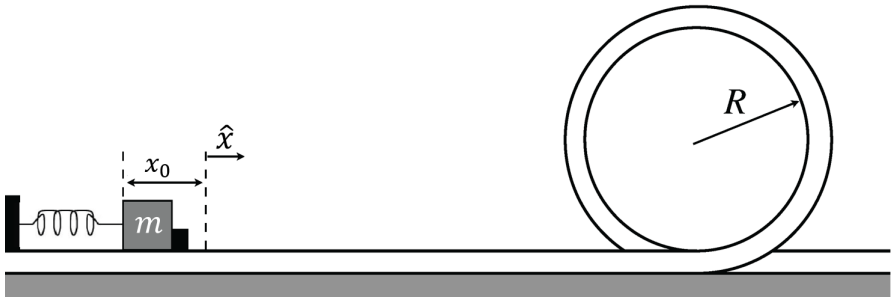


Figure 1: Situation with *no* friction.

A small block of mass $m$ is pushed against a spring with spring constant $k$ and is held in place with a latch. The spring is compressed an unknown distance $x_0$ (see figure 1). When the latch is released, the block leaves the spring and slides along a frictionless track with a circular loop of radius $R$. There is no air drag.

a. Assuming that the block is able to go around the loop, what is the speed of the block after exiting the loop? What is its velocity?

   Give the answer in terms of $m$, $k$, and $x_0$.

b. If the force exerted by the loop on the block (i.e., the normal force) at the top of the loop is equal to the weight, find the speed of the block at the top of the loop in terms of $g$ and $R$.

   What is the initial spring compression $x_0$ required for this to occur?

c. What is the minimum value of $x_0$ required for the block to complete the loop without ever losing contact with the track?

   Hint: What must the value of the normal force be at the top of the loop in the limiting case?

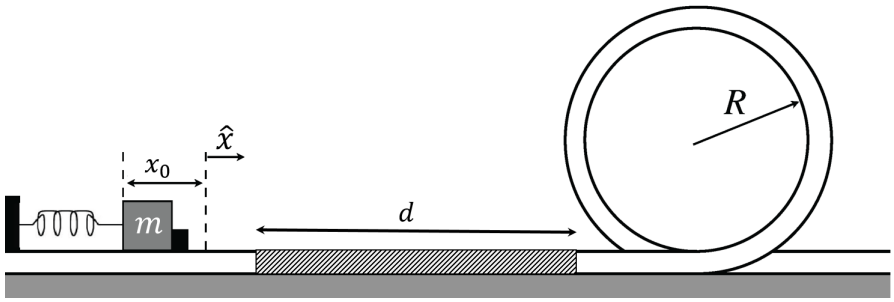


Figure 2: Situation including friction.

d. Now consider the situation in which the block has to move a distance $d$ across a rough surface with a constant coefficient of kinetic friction $\mu_k$ before entering the loop (see figure 2).

   Compute the work done by friction on the block.

e. What is the minimum value of $x_0$ required for the block to make it all the way across the rough surface?

f. What is the minimum value of $x_0$ required for the block to complete the loop without ever losing contact with the track? This is different from part (c) in that, now, the block has to move across the rough surface.

   What is the speed of the block after exiting the loop?

## 2. Fragmenting projectile (8 points)

At time $t = 0$, a cannon in the middle of a flat desert fires a projectile of mass $M$ with a speed $v_0$ at an angle $\alpha$ with respect to the horizontal. At the peak of its trajectory, the projectile explodes into two fragments of mass $m_1$ and $m_2$, respectively. The velocities of the two fragments immediately after the explosion are purely horizontal. Neglect air drag.

a. Make a sketch of the problem. Define clearly your reference frame.

b. At what time does the explosion occur?

c. Determine the *position* at which the explosion occurs.

   To simplify your answer, you may use the identity $\sin(2\alpha) = 2\sin(\alpha)\cos(\alpha)$.

d. At what time do the fragments hit the ground? Why do they hit the ground at the same time?

e. Determine the distance from the cannon at which the center of mass (CM) intercepts the ground.

   Hint: How does the explosion of the projectile affect the motion of its CM?

f. Consider the case in which fragment $m_1$ reaches the cannon. At what distance from the cannon does $m_2$ land?

   Express your answer in terms of $M$, $m_1$, $v_0$, $g$, and $\alpha$.

g. What would the landing distance of $m_2$ be if, instead, $m_1$ landed at half the distance between the cannon and the horizontal location of the explosion?

h. Assuming that $m_1$ reaches the cannon, as in part (f), what are the velocities of $m_1$ and $m_2$ immediately after the explosion?

   Express your answer in terms of $M$, $m_1$, $v_0$, and $\alpha$.