4 Three Dimensional Systems

We will now move on to the next level of complexity in solving the time independent Schrödinger equation: systems of three dimensions. There are interesting new phenomena that arise in multidimensional systems that are due to the equivalence of the *x*, *y*, and *z* directions.

We will start with the simplest case: a particle in a three dimensional box. We will then move on to the rigid rotor, which is used as a model for the rotational motion of a diatomic molecule. After this, we will spend a little time discussing angular momentum in Quantum Mechanical systems and then treat the hydrogen atom problem.

4.1 Particle in a 3-dimensional box

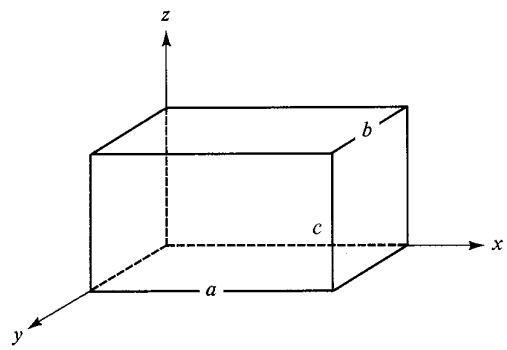

Let $V = 0$ inside the box and $V = \infty$ outside the box. The Schrödinger equation inside the box is:

$$-\frac{\hbar^2}{2m}\left(\frac{\partial^2\psi(x,y,z)}{\partial x^2}+\frac{\partial^2\psi(x,y,z)}{\partial y^2}+\frac{\partial^2\psi(x,y,z)}{\partial z^2}\right)=E\psi(x,y,z)$$

or

$$-\frac{\hbar^2}{2m}\nabla^2\psi(x,y,z)=E\psi(x,y,z)$$

Where $$\nabla^2=\frac{\partial^2}{\partial x^2}+\frac{\partial^2}{\partial y^2}+\frac{\partial^2}{\partial z^2}$$

is called the Laplacian Operator

We will use the technique of *separation of variables*.

Whenever the Hamiltonian $\hat{H}$ can be written as a sum of parts depending upon each coordinate, *i.e.*

$$\hat{H}(x,y,z)=\hat{H}(x)+\hat{H}(y)+\hat{H}(z)$$

we can assume that

$$\psi(x,y,z)=\psi_x(x)\psi_y(y)\psi_z(z)$$

We can then write:

$$-\frac{\hbar^2}{2m}\left(\psi_y(y)\psi_z(z)\frac{\partial^2\psi_x(x)}{\partial x^2}+\psi_x(x)\psi_z(z)\frac{\partial^2\psi_y(y)}{\partial y^2}+\psi_x(x)\psi_y(y)\frac{\partial^2\psi_z(z)}{\partial z^2}\right)=E\,\psi_x(x)\psi_y(y)\psi_z(z)$$

If we divide both sides by $\psi_x(x)\psi_y(y)\psi_z(z)$ we get

$$-\frac{\hbar^2}{2m\,\psi_x(x)}\frac{\partial^2\psi_x(x)}{\partial x^2}-\frac{\hbar^2}{2m\,\psi_y(y)}\frac{\partial^2\psi_y(y)}{\partial y^2}-\frac{\hbar^2}{2m\,\psi_z(z)}\frac{\partial^2\psi_z(z)}{\partial z^2}=E$$

Each of the terms on the left hand side are independently functions of *x*, *y*, and *z* respectively. For these terms to sum to a constant for all *x*, *y*, and *z*, each term must separately equal a constant. Thus.

$$-\frac{\hbar^2}{2m\,\psi_x(x)}\frac{\partial^2\psi_x(x)}{\partial x^2}=E_x \qquad -\frac{\hbar^2}{2m\,\psi_y(y)}\frac{\partial^2\psi_y(y)}{\partial y^2}=E_y \qquad -\frac{\hbar^2}{2m\,\psi_z(z)}\frac{\partial^2\psi_z(z)}{\partial z^2}=E_z$$

where $\qquad E_x+E_y+E_z=E$

Rearranging these we see that we get 3 independent particle-in-a-box equations.

$$\frac{\partial^2\psi_x(x)}{\partial x^2}+\frac{2mE_x}{\hbar^2}\psi_x(x)=0$$
$$\frac{\partial^2\psi_y(y)}{\partial y^2}+\frac{2mE_y}{\hbar^2}\psi_y(y)=0$$
$$\frac{\partial^2\psi_z(z)}{\partial z^2}+\frac{2mE_z(z)}{\hbar^2}\psi_z=0$$

Each of these has boundary conditions that force the wavefunction to zero at either boundary since the potential outside the box is infinite

$$\psi_x(0)=\psi_x(a)=\psi_y(0)=\psi_y(b)=\psi_z(0)=\psi_z(c)=0$$

Applying these boundary conditions as we did with the particle in the box we get:

$$\psi_x(x)=A_x\sin\left(\frac{n_x\pi}{a}x\right) \qquad E_x=\frac{h^2n_x^2}{8ma^2} \qquad n_x=1,2,3,\ldots$$

$$\psi_y(y)=A_y\sin\left(\frac{n_y\pi}{b}y\right) \qquad E_y=\frac{h^2n_y^2}{8mb^2} \qquad n_y=1,2,3,\ldots$$

$$\psi_z(z)=A_z\sin\left(\frac{n_z\pi}{c}z\right) \qquad E_z=\frac{h^2n_z^2}{8mc^2} \qquad n_z=1,2,3,\ldots$$

The total wavefunctions is then

$$\psi(x,y,z)=\psi_x(x)\psi_y(y)\psi_z(z)$$
$$=A_xA_yA_z\sin\left(\frac{n_x\pi}{a}x\right)\sin\left(\frac{n_y\pi}{b}y\right)\sin\left(\frac{n_z\pi}{c}z\right)$$

The normalization constant can be found by:

$$\int_0^a\int_0^b\int_0^c\psi^*(x,y,z)\psi(x,y,z)dxdydz=1$$

One can integrate just over the box since ψ is zero outside box. The integral will yield

$$A_x A_y A_z = \sqrt{\frac{8}{abc}}$$

Another way to do this would be to realize that the particle must independently have unit probability of being found at some *x*, some *y*, and some *z*. (This will be true for any orthogonal coordinate system).

Therefore

$$\int_0^a \psi_x^*(x)\psi_x(x)dx = 1 \qquad \Rightarrow \qquad A_x = \sqrt{\frac{2}{a}}$$

and similarly for *y* and *z*.

To find average properties for a 3-dimensional particle in box (*x* for example) one would write:

$$\langle x \rangle = \int_0^a\int_0^b\int_0^c \psi_x^*(x)\psi_y^*(y)\psi_z^*(z)x\psi_x(x)\psi_y(y)\psi_z(z)dxdydz$$

One can write this as

$$\langle x \rangle = \int_0^a \psi_x^*(x)x\psi_x(x)dx\int_0^b \psi_y^*(y)\psi_y(y)dy\int_0^c \psi_z^*(z)\psi_z(z)dz$$

which is the same as the 1-dimensional problem.

Let's look at the 3-dimensional particle-in-a-box energies:

$$E_{n_x n_y n_z} = E_x + E_y + E_z = \frac{h^2}{8m}\left(\frac{n_x^2}{a^2} + \frac{n_y^2}{b^2} + \frac{n_z^2}{c^2}\right)$$

where we label the energy *E* by the three quantum numbers. The quantum numbers n_x, n_y, n_z vary independently and can be attributed to the 3-dimensional nature of the problem.

Consider the case in which our box has sides of equal length, *a*=*b*=*c*. The energy levels are then given by

$$E_{n_x n_y n_z} = \frac{h^2}{8ma^2}\left(n_x^2 + n_y^2 + n_z^2\right)$$

Notice what this brings about. You get wave functions corresponding to different quantum numbers having the same energy. For example:

$$\psi_{2,1,1}(x,y,z) = \sqrt{\frac{8}{a^3}}\sin\left(\frac{2\pi}{a}x\right)\sin\left(\frac{\pi}{a}y\right)\sin\left(\frac{\pi}{a}z\right)$$

$$\psi_{1,1,2}(x,y,z) = \sqrt{\frac{8}{a^3}}\sin\left(\frac{\pi}{a}x\right)\sin\left(\frac{\pi}{a}y\right)\sin\left(\frac{2\pi}{a}z\right)$$

These have the same energy eigenvalue because $n_x^2 + n_y^2 + n_z^2 = 6$ in both cases.

The situation where two or more wave functions have the same energy is called *degeneracy*, and the levels are called degenerate levels.

If there are *n* different eigenfunctions, which correspond to the same energy, the system is considered to be *n-fold degenerate.*

You can see that this was caused by the symmetry of the system. When we let the 3 sides of the box be the same length, the three directions became completely equivalent.

There are important implications when one has degenerate levels which are related to the following theorem:

THEOREM
If we have an *n*-fold degenerate level in which *n* independent wavefunctions $\psi_1, \psi_2, \ldots, \psi_n$ correspond to the same energy *E*, any linear combination

$$\varphi = c_1\psi_1 + c_2\psi_2 + \ldots + c_n\psi_n$$

of the *n* functions of the degenerate level is also an eigenfunction of the Hamiltonian with eigenvalue *E*.

Proof:
We need to show that if

$$\hat{H}\psi_1 = E\psi_1 \qquad \hat{H}\psi_2 = E\psi_2 \qquad \ldots \qquad \hat{H}\psi_n = E\psi_n$$

then $\hat{H}\varphi = E\varphi$

where $\varphi = c_1\psi_1 + c_2\psi_2 + \ldots + c_n\psi_n$

or $\hat{H}\left[c_1\psi_1 + c_2\psi_2 + \ldots + c_n\psi_n\right] = E\left[c_1\psi_1 + c_2\psi_2 + \ldots + c_n\psi_n\right]$

Since the Hamiltonian is linear we can write

$$\begin{aligned}\hat{H}\left[c_1\psi_1 + c_2\psi_2 + \ldots + c_n\psi_n\right] &= \hat{H}c_1\psi_1 + \hat{H}c_2\psi_2 + \ldots + \hat{H}c_n\psi_n \\ &= c_1\hat{H}\psi_1 + c_2\hat{H}\psi_2 + \ldots + c_n\hat{H}\psi_n\end{aligned}$$

But since ψ_n are eigenfunctions with same eigenvalue *E*,

$$\hat{H}\left[c_1\psi + c_2\psi_2 + \ldots + c_n\psi_n\right] = c_1E\psi_1 + c_2E\psi_2 + \ldots + c_nE\psi_n$$

Thus,

$$\hat{H}\left[c_1\psi_1 + c_2\psi_2 + \ldots + c_n\psi_n\right] = E\left[c_1\psi_1 + c_2\psi_2 + \ldots + c_n\psi_n\right]$$

or $\hat{H}\varphi = E\varphi$

We will see degeneracy crop up in many other parts of the course, for example when we will discuss the orbitals of the hydrogen atom.

In particular, it has some effects on simultaneous measurements in quantum mechanical systems.

4.2 Separability of the Hamiltonian

The 3-dimensional particle-in-a-box has illustrated another important principle that we have already seen twice before and will see frequently in this course—the use of the technique of separation of variables to solve a partial differential equation.

Essentially it allows us to replace a partial differential equation with a set of ordinary differential equations. We did this for the time dependent Schrödinger equation, the classical mechanical harmonic oscillator, and now for the 3-dimensional particle-in-a-box.

While this is a standard technique for partial differential equations in general, it has particularly important consequences when applied to solving the Schrödinger equation.

In general, if the Hamiltonian can be written in the form

$$\hat{H}(q_1, q_2, q_3) = \hat{H}(q_1) + \hat{H}(q_2) + \hat{H}(q_3)$$

(using a 3-dimensional case as an example) where the *q*'s are any set of orthogonal coordinates, we say that the Hamiltonian is *separable*.

This is true because the Schrödinger equation is a linear, homogeneous differential equation. We can assume solutions to the Schrödinger equation in the form

$$\psi(q_1, q_2, q_3) = \psi(q_1)\psi(q_2)\psi(q_3)$$

We then get 3 ordinary differential equations involving $\psi(q_1)$, $\psi(q_2)$ and $\psi(q_3)$.

The resulting eigenvalues for the energy *E* will be the sum:

$$E = E_1 + E_2 + E_3$$

We can generalize this result to the case where we can write our Hamiltonian in terms of two independent sets of coordinates.

For example, in a many particle system, if we can write the Hamiltonian in a form which divides according to the coordinates of each particle, then we can solve separate Schrödinger equations for each particle. The wave functions will be the product of wave functions of each particle and the energy will be a sum of energies for each particle.

Another way one can divide the Hamiltonian for a system of two particles is to write the total energy in terms of the energy of the motion of the center of mass and the relative motion of the particles. We can do this whenever the potential energy depends only on the relative coordinates. (Remember we had done something like this for the solution to the classical harmonic oscillator).

If we let *X*, *Y*, and *Z* be the coordinates of the center of mass and *x*, *y*, and *z* be the internal or relative coordinates (coordinates relative to the center of mass), we can write the total energy of the system

$$E = \frac{M}{2}\left(\mathrm{V}_X^2 + \mathrm{V}_Y^2 + \mathrm{V}_Z^2\right) + \frac{\mu}{2}\left(\mathrm{v}_x^2 + \mathrm{v}_y^2 + \mathrm{v}_z^2\right) + U(x, y, z)$$

where *M* is the total mass and μ is the reduced mass (as we had defined earlier).

We can write this in terms of momenta by noting that

$$P_X = M\mathrm{V}_X \qquad \text{and} \qquad p_x = \mu \mathrm{v}_x$$

and similarly for y and z.

$$E = \frac{1}{2M}\left(P_X^2 + P_Y^2 + P_Z^2\right) + \frac{1}{2\mu}\left(p_x^2 + p_y^2 + p_z^2\right) + U(x, y, z)$$

We can then write the quantum mechanical Hamiltonian as

$$\hat{H} = -\frac{\hbar^2}{2M}\left(\frac{\partial^2}{\partial X^2} + \frac{\partial^2}{\partial Y^2} + \frac{\partial^2}{\partial Z^2}\right) - \frac{\hbar^2}{2\mu}\left(\frac{\partial^2}{\partial x^2} + \frac{\partial^2}{\partial y^2} + \frac{\partial^2}{\partial z^2}\right) + U(x,y,z)$$

You can see this falls into the form

$$\hat{H} = \hat{H}_1 + \hat{H}_2$$

where $\hat{H}_1$ depends on the center of mass coordinates only and $\hat{H}_2$ depends on internal coordinates only. The total wavefunction is therefore

$$\psi_{Tot}(X,Y,Z,x,y,z) = \psi_{Trans}(X,Y,Z)\psi_{Int}(x,y,z)$$

and the energies are

$$E_{Tot} = E_{Trans} + E_{Int}$$

If we look at the part of the Hamiltonian that describes the motion of the center of mass

$$\hat{H}_1 = -\frac{\hbar^2}{2M}\left(\frac{\partial^2}{\partial X^2} + \frac{\partial^2}{\partial Y^2} + \frac{\partial^2}{\partial Z^2}\right)$$

you can see that this just represents the translational motion of a free particle in space. Since there is no potential to impose boundary conditions, <u>*the energy of a free particle is not quantized.*</u>

Thus, the contribution to the total energy is just a constant and is of little interest. If you look at any transitions between energy levels, this constant will drop out since it is the same for all internal states.

We are left with the Schrödinger equation for the relative motion

$$\left[-\frac{\hbar^2}{2\mu}\left(\frac{\partial^2}{\partial x^2} + \frac{\partial^2}{\partial y^2} + \frac{\partial^2}{\partial z^2}\right) + U(x,y,z)\right]\psi_{Int}(x,y,z) = E_{Int}\psi_{Int}(x,y,z)$$

or simply

$$\left[-\frac{\hbar^2}{2\mu}\nabla^2 + U(x,y,z)\right]\psi_{Int}(x,y,z) = E_{Int}\psi_{Int}(x,y,z)$$

where ∇^2 is the Laplacian Operator.

Later we will see that this Schrödinger equation can be further separated, although we will not show this explicitly until next semester. For example, when modeling the vibrational and rotational motion of a diatomic, to first order one can separate the vibrational coordinates (relative distance) and the rotational coordinates (angular orientation). This will allow us to write the energy of a vibrating, rotating diatomic as the sum of the vibrational energy and the rotational energy.

So when we draw vibrational energy levels on a harmonic potential energy curve for example, one can draw the rotational energy levels on top of this.

We will also be able to separate the motions of the electrons from those of the nuclei.

4.3 Choice of Coordinate Systems

For a multi-particle system, the Hamiltonian may be very complicated in Cartesian coordinates with lots of cross terms. However certain problems have an inherent symmetry that can simplify the problem if the coordinate system coincides with that symmetry.

For example consider a diatomic which is constrained to rotate in the *x*-*y* plane:

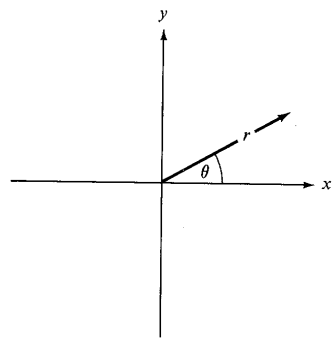

You can see that upon rotation both *x* and *y* will change, however if you look at what happens in plane polar coordinates (r, θ), only θ changes. The Hamiltonian can be written as a function of θ only (which is the same as particle on a ring).

Consider a rotor in which the distance *r* is fixed (*i.e.*, a *rigid rotor*) but which is not confined to a plane.

We need to convert to spherical polar coordinates.

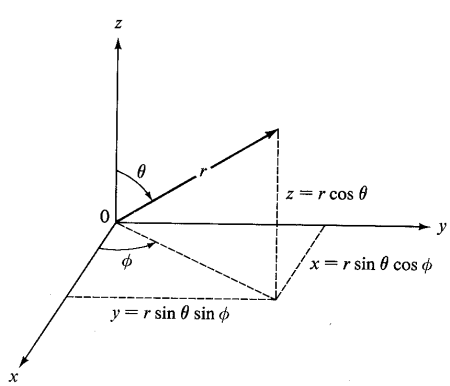

$$x = r\sin\theta\cos\varphi$$
$$y = r\sin\theta\sin\varphi$$
$$z = r\cos\theta$$

$$0 \le \theta \le \pi, 0 \le \varphi \le 2\pi, 0 \le r \le \infty$$

$$r^2 = x^2 + y^2 + z^2$$
$$\cos\theta = \frac{z}{r} = \frac{z}{\sqrt{x^2 + y^2 + z^2}}$$
$$\tan\varphi = \frac{y}{x}$$

Here *r* is fixed, and only θ and φ change. In Cartesian coordinates you would have to consider the change in all three coordinates, *x, y*, and *z*.

So choosing the proper coordinate system can help separate (and simplify) the Hamiltonian.

It turns out that for any two- particle problem in which the potential *U* simply depends upon the relative coordinates of the two particles, (*i.e*. $U = U(r)$), one can greatly simplify the problem by working in spherical polar coordinates.

To convert the Schrödinger equation for internal or relative motion

$$\left[-\frac{\hbar^2}{2\mu}\nabla^2 + U(x,y,z)\right]\psi(x,y,z) = E_{Int}\psi(x,y,z)$$

into spherical polar coordinates, one must convert the Laplacian operator ∇^2 to spherical polar coordinates. To do this you need to use the chain rule of differentiation to convert all the second partial derivatives from derivatives with respect to *x*, *y*, and *z* to those with respect to *r*, θ, φ.

For example, consider some function $f(r,\theta,\varphi)$ where *r*, θ, and φ are in turn functions of *x*, *y*, and *z*.

$$\left(\frac{\partial f}{\partial x}\right)_{y,z} = \left(\frac{\partial r}{\partial x}\right)_{y,z}\left(\frac{\partial f}{\partial r}\right)_{\vartheta,\varphi} + \left(\frac{\partial \vartheta}{\partial x}\right)_{y,z}\left(\frac{\partial f}{\partial \vartheta}\right)_{r,\varphi} + \left(\frac{\partial \varphi}{\partial x}\right)_{y,z}\left(\frac{\partial f}{\partial \varphi}\right)_{r,\vartheta}$$

and similarly for *y* and *z*.

To make this into an operator equation we need to write:

$$\left(\frac{\partial}{\partial x}\right)_{y,z} f = \left[\left(\frac{\partial r}{\partial x}\right)_{y,z}\left(\frac{\partial}{\partial r}\right)_{\vartheta,\varphi} + \left(\frac{\partial \vartheta}{\partial x}\right)_{y,z}\left(\frac{\partial}{\partial \vartheta}\right)_{r,\varphi} + \left(\frac{\partial \varphi}{\partial x}\right)_{y,z}\left(\frac{\partial}{\partial \varphi}\right)_{r,\vartheta}\right] f$$

The second derivatives come from applying this operator twice.

$$\left(\frac{\partial^2}{\partial x^2}\right)_{y,z} f = \left(\frac{\partial}{\partial x}\right)_{y,z}\left(\frac{\partial}{\partial x}\right)_{y,z} f$$

$$= \left(\frac{\partial}{\partial x}\right)_{y,z}\left[\left(\frac{\partial r}{\partial x}\right)_{y,z}\left(\frac{\partial}{\partial r}\right)_{\vartheta,\varphi} + \left(\frac{\partial \vartheta}{\partial x}\right)_{y,z}\left(\frac{\partial}{\partial \vartheta}\right)_{r,\varphi} + \left(\frac{\partial \varphi}{\partial x}\right)_{y,z}\left(\frac{\partial}{\partial \varphi}\right)_{r,\vartheta}\right] f$$

We now need to substitute in for $\frac{\partial f}{\partial x}$ from the previous equation. Then we need to calculate the partial derivatives of *r*, θ, and φ with respect to *x*, *y*, and *z*.

Then the whole process has to be repeated for the second partials with respect to *y* and *z*. I will skip over the gory details and leave them for the exercises. When we are all done, the Laplacian in spherical polar coordinates is

$$\nabla^2 = \frac{1}{r^2}\frac{\partial}{\partial r}\left(r^2\frac{\partial}{\partial r}\right) + \frac{1}{r^2\sin\theta}\frac{\partial}{\partial\theta}\left(\sin\theta\frac{\partial}{\partial\theta}\right) + \frac{1}{r^2\sin^2\theta}\left(\frac{\partial^2}{\partial\varphi^2}\right)$$

Although this looks quite complicated, it greatly simplifies the Hamiltonian of systems which have spherical symmetry, that is cases where $U = U(r)$.

We will use this form of ∇^2 in our solution of the rigid rotor and hydrogen atom.

4.4 The Rigid Rotor: A Model for a Rotating Diatomic

Consider two particles rotating - rigidly fixed at some distance *r* apart.

For diatomics, this approximation is pretty good because in the ground vibrational state, the root mean square amplitude is approximately 5% of the equilibrium bond distance. For higher vibrational levels this approximation begins to break down.

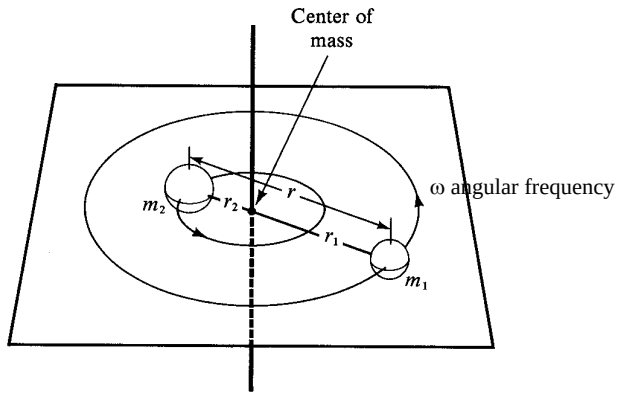

The system rotates about the center of mass: *i.e.* the center of mass looks stationary.

Center of mass condition:

$$m_1 r_1 = m_2 r_2 \qquad \text{and} \qquad r = r_1 + r_2$$

This gives

$$r_1 = \frac{m_2}{m_1 + m_2} r \qquad \text{and} \qquad r_2 = \frac{m_1}{m_1 + m_2} r$$

The kinetic energy is given by:

$$KE = \frac{1}{2} m_1 \mathrm{v}_1^2 + \frac{1}{2} m_2 \mathrm{v}_2^2$$

but note that

$$\mathrm{v}_1 = r_1 \omega \qquad \text{and} \qquad \mathrm{v}_2 = r_2 \omega$$

We therefore have:

$$KE = \frac{1}{2} m_1 r_1^2 \omega^2 + \frac{1}{2} m_2 r_2^2 \omega^2$$

$$= \frac{1}{2}\left(m_1 r_1^2 + m_2 r_2^2\right)\omega^2$$

$$= \frac{1}{2} I \omega^2$$

where

$$I = m_1 r_1^2 + m_2 r_2^2 \qquad \text{or} \qquad I = \frac{m_1 m_2}{m_1 + m_2} r^2 = \mu r^2$$

So we find that the moment of inertia of a diatomic is the same as that of a single particle of mass μ rotating about a point.

As an aside, note the symmetry between linear motion and rotational motion.

Linear Motion	***Rotational Motion***
x	θ
$\mathrm{v} = \dfrac{dx}{dt}$	$\omega = \dfrac{d\theta}{dt}$
$p = m\mathrm{v}$	$L = I\omega$
$KE = \dfrac{1}{2}m\mathrm{v}^2 = \dfrac{p^2}{2m}$	$KE = \dfrac{1}{2}I\omega^2 = \dfrac{L^2}{2I}$
m	I

Angular displacement is analogous to linear displacement. Moment of inertia is analogous to mass. Angular velocity is analogous to linear velocity. Angular momentum is analogous to linear momentum.

We now need to write down the Schrödinger equation for the rigid rotor. By our definition of the rigid rotor, the potential term in the Hamiltonian is zero since the distance *r* is fixed, $U(r) = 0$. We can set the zero of energy wherever we like and we choose it to be zero at the distance *r*. Since *r* is fixed, the potential is always zero. Thus, the Hamiltonian consists only of a kinetic energy term.

Because *r* is fixed for the rigid rotator, this problem has spherical symmetry. That is, $U = 0$ falls into the category of $U = U(r)$ (independent of θ and φ). We would therefore like to write down the Hamiltonian in spherical polar coordinates to take advantage of the symmetry of the system.

We can write down the classical expression for the rotational kinetic energy:

$$KE_{Classical} = \frac{1}{2}I\omega^2 = \frac{L^2}{2I}$$

and then find the Hamiltonian by substituting the $\hat{L}^2$ operator in spherical polar coordinates. This is a fairly lengthy procedure. One writes down

$$L^2 = L_x^2 + L_y^2 + L_z^2$$

and then substitutes in the expressions for the L_x, L_y, and L_z operators (I had given you these when we were discussing postulate 2). Once you substitute in the operators, you then have to convert all the partial derivatives to spherical polar coordinates.

The easier way to do it is to realize that we have already converted the ∇^2 operator into spherical polar coordinates. Recall that the Schrödinger equation for the internal or relative motion of a two-particle system is

$$\left[-\frac{\hbar^2}{2\mu}\nabla^2 + U\right]\psi = E_{Int}\psi$$

For the rigid rotator, $U = 0$, so we can write

$$\hat{H} = -\frac{\hbar^2}{2\mu}\nabla^2$$

Recall that ∇^2 in spherical polar coordinates is

$$\nabla^2 = \frac{1}{r^2}\frac{\partial}{\partial r}\left(r^2\frac{\partial}{\partial r}\right) + \frac{1}{r^2\sin\theta}\frac{\partial}{\partial\theta}\left(\sin\theta\frac{\partial}{\partial\theta}\right) + \frac{1}{r^2\sin^2\theta}\left(\frac{\partial^2}{\partial\varphi^2}\right)$$

For the rigid rotor, *r is constant*, so the first term of this operator operating on a function will just give zero (*i.e.* there will be no *r* dependence of the wave function if *r* is fixed).

The other way to look at it is that the first term of this operator (when multiplied by $-\hbar^2/2\mu$) represents the radial part of the kinetic energy. Since *r* is fixed, there is no radial contribution to the kinetic energy. So we have:

$$\hat{H} = -\frac{\hbar^2}{2\mu}\nabla^2 = -\frac{\hbar^2}{2\mu}\left[\frac{1}{r^2\sin\theta}\frac{\partial}{\partial\theta}\left(\sin\theta\frac{\partial}{\partial\theta}\right) + \frac{1}{r^2\sin^2\theta}\left(\frac{\partial^2}{\partial\varphi^2}\right)\right]$$

We can use this to determine the operator for L^2 if we would need it (we will need it shortly when we discuss angular momentum). If we take the $1/r^2$ outside we can write

$$\hat{H} = -\frac{\hbar^2}{2\mu}\nabla^2 = -\frac{\hbar^2}{2\mu r^2}\left[\frac{1}{\sin\theta}\frac{\partial}{\partial\theta}\left(\sin\theta\frac{\partial}{\partial\theta}\right) + \frac{1}{\sin^2\theta}\left(\frac{\partial^2}{\partial\varphi^2}\right)\right]$$

$$= -\frac{\hbar^2}{2I}\left[\frac{1}{\sin\theta}\frac{\partial}{\partial\theta}\left(\sin\theta\frac{\partial}{\partial\theta}\right) + \frac{1}{\sin^2\theta}\left(\frac{\partial^2}{\partial\varphi^2}\right)\right]$$

Comparing this to the expression for the kinetic energy in terms of the angular momentum operator we have

$$\hat{L}^2 = -\hbar^2\left[\frac{1}{\sin\theta}\frac{\partial}{\partial\theta}\left(\sin\theta\frac{\partial}{\partial\theta}\right) + \frac{1}{\sin^2\theta}\left(\frac{\partial^2}{\partial\varphi^2}\right)\right]$$

Getting back to the Schrödinger equation we have

$$\hat{H}\psi(\theta,\varphi) = E\psi(\theta,\varphi)$$

By convention, the wave functions $\psi(\theta,\varphi)$ for the rigid rotor are usually denoted $Y(\theta,\varphi)$:

$$\hat{H}Y(\theta,\varphi) = EY(\theta,\varphi)$$

There is no *r* dependence to the functions because *r* is not a variable.

The eigenfunctions $Y(\theta,\varphi)$ are called ***spherical harmonics*** and arise as solutions to the angular part of all spherically symmetric potentials, including the hydrogen atom.

Writing out the Schrödinger equation in more detail

$$-\frac{\hbar^2}{2I}\left[\frac{1}{\sin\theta}\frac{\partial}{\partial\theta}\left(\sin\theta\frac{\partial}{\partial\theta}\right) + \frac{1}{\sin^2\theta}\left(\frac{\partial^2}{\partial\varphi^2}\right)\right]Y(\theta,\varphi) = EY(\theta,\varphi)$$

Let us make the substitution

$$\beta = \frac{2IE}{\hbar^2}$$

and multiply through by $\sin^2\theta$ to get

$$\sin\theta\frac{\partial}{\partial\theta}\left(\sin\theta\frac{\partial Y(\theta,\varphi)}{\partial\theta}\right) + \frac{\partial^2 Y(\theta,\varphi)}{\partial\varphi^2} + \beta\sin^2\theta\, Y(\theta,\varphi) = 0$$

We will once again use the technique of separation of variables to simplify this partial differential equation.

Let

$$Y(\theta,\varphi)=\Theta(\theta)\Phi(\varphi)$$

Substitute this into the differential equation and divide both sides by $\Theta(\theta)\Phi(\varphi)$:

$$\frac{\sin\theta}{\Theta(\theta)}\frac{\partial}{\partial\theta}\left(\sin\theta\frac{\partial\Theta(\theta)}{\partial\theta}\right)+\beta\sin^2\theta+\frac{1}{\Phi(\varphi)}\frac{\partial^2\Phi(\varphi)}{\partial\varphi^2}=0$$

You can see that the first two terms are only functions of θ and the last is only a function of φ. For this equation to hold for all θ and φ each part must separately equal a constant.

Let us call the separation constant m^2.

$$\frac{\sin\theta}{\Theta(\theta)}\frac{\partial}{\partial\theta}\left(\sin\theta\frac{\partial\Theta(\theta)}{\partial\theta}\right)+\beta\sin^2\theta=m^2$$

$$\frac{1}{\Phi(\varphi)}\frac{\partial^2\Phi(\varphi)}{\partial\varphi^2}=-m^2 \qquad \text{or} \qquad \frac{\partial^2\Phi(\varphi)}{\partial\varphi^2}+m^2\Phi(\varphi)=0$$

The solution to the Φ part is straightforward; in fact we have done it before.

By inspection

$$\Phi(\varphi)=A_m e^{im\varphi} \qquad \text{or} \qquad \Phi(\varphi)=A_m e^{-im\varphi}$$

These solutions represent clockwise and counterclockwise rotation in the angle φ respectively.

Since the wave function must be single valued and continuous, we must require that $\Phi(\varphi)=\Phi(\varphi+2\pi)$

$$A_m e^{im\varphi}=A_m e^{im(\varphi+2\pi)}$$

consequently

$$e^{im2\pi}=1$$

This will be true when m = 0, ±1, ±2, . . .

We could have applied the boundary conditions to the $e^{-im\varphi}$ term as well and gotten the same result (or we could have applied it to a linear combination of the two solutions).

The constant A_m is determined by the normalization condition:

$$\int_0^{2\pi}\Phi^*(\varphi)\Phi(\varphi)d\varphi=1$$

$$A_m^2\int_0^{2\pi}e^{-im\varphi}e^{im\varphi}d\varphi=A_m^2\int_0^{2\pi}d\varphi=1$$

$$A_m^2 2\pi=1 \qquad \Rightarrow \qquad A_m=\frac{1}{\sqrt{2\pi}}$$

So the solution to the Φ part of the equation is

$$\Phi(\varphi) = \frac{1}{\sqrt{2\pi}} e^{im\varphi} \qquad m = 0, \pm 1, \pm 2, \ldots$$

It is clear that this is exactly the same as the particle on a ring. It should be. It is a one-dimensional rotational problem with fixed distance.

We have now solved the φ part of the rigid rotator problem. We still need to solve the differential equation for the θ part

$$\frac{\sin\theta}{\Theta(\theta)} \frac{\partial}{\partial\theta}\left(\sin\theta \frac{\partial\Theta(\theta)}{\partial\theta}\right) + \beta \sin^2\theta = m^2$$

If we take this equation and let $x = \cos\theta$ and $\Theta(\theta) = P(x)$ one could show that the differential equation becomes

$$\left(1 - x^2\right)\frac{d^2P(x)}{dx^2} - 2x\frac{dP(x)}{dx} + \left[\beta - \frac{m^2}{1 - x^2}\right]P(x) = 0$$

This differential equation is called **Legendre's equation** and is well known in classical physics. It occurs in a variety of problems which have spherical symmetry. The solution to this equation is similar to our solution to the differential equation that arose from the Harmonic Oscillator problem. The standard technique to solving this is to expand the function in a power series, generate a recursion relation, and then break off the power series after a finite number of terms to force it to be well behaved at the boundaries.

We will not go through the details but in an analogous way to the Harmonic oscillator problem, in breaking off the power series, one gets the quantization of the energy:

$$\beta = l\left(l + 1\right)$$

but recall that

$$\beta = \frac{2lE}{\hbar^2}$$

so

$$E = \frac{\hbar^2}{2I} l\left(l + 1\right) \qquad l = 0, 1, 2, \ldots$$

I will first discuss the wave functions and will then come back and discuss the implications of these energy eigenvalues.

The solutions to Legendre equation

$$\left(1 - x^2\right)\frac{d^2P(x)}{dx^2} - 2x\frac{dP(x)}{dx} + \left[l\left(l + 1\right) - \frac{m^2}{1 - x^2}\right]P(x) = 0$$

when m=0 are called the **Legendre Polynomials** and are designated by the value of l as a subscript, *i.e.* $P_0(x)$, $P_1(x)$, etc.

These are listed in many standard texts in mathematics and physics. The first few Legendre Polynomials are:

$$P_0(x) = 1$$

$$P_1(x) = x$$

$$P_2(x) = \frac{1}{2}\left(3x^2 - 1\right)$$

$$P_3(x) = \frac{1}{2}\left(5x^3 - 3x\right)$$

$$P_4(x) = \frac{1}{8}\left(35x^4 - 30x^2 + 3\right)$$

Note that there is some similarity to the Hermite polynomials from the harmonic oscillator problem

To generate the function $\Theta(\theta)$ you must substitute $x = \cos\theta$.

The solutions for $m \neq 0$ are called the **Associated Legendre Functions**, and these are related to the Legendre Polynomials. They are designated by a subscript for *l* and a superscript indicating the absolute value of *m*,

$$P_l^{|m|}(x)$$

The Associated Legendre functions can be related to the Legendre Polynomials by

$$P_l^{|m|}(x) = \left(1 - x^2\right)^{\frac{|m|}{2}} \frac{d^{|m|}P_l(x)}{dx^{|m|}}$$

Since only the absolute value of *m* is included here, then the Θ equation for +*m* and -*m* is the same. (The overall functions are different however because the Φ part is different.)

Note that the Legendre Polynomials are also associated Legendre functions; hence the solution to the problem is usually stated in terms of the latter (*i.e.* the superscript for $|m|$ is retained even when *m*=0).

The first few associated Legendre functions are:

	l=0	*l*=1	*l*=2	*l*=3
m=0	$P_0^0 = 1$	$P_1^0 = \cos\theta$	$P_2^0 = \frac{1}{2}\left(3\cos^2\theta - 1\right)$	$P_3^0 = \frac{1}{2}\left(5\cos^3\theta - 3\cos\theta\right)$
m=±1		$P_1^1 = \sin\theta$	$P_2^1 = 3\cos\theta\sin\theta$	$P_3^1 = \frac{3}{2}\left(5\cos^3\theta - 1\right)\sin\theta$
m=±2			$P_2^2 = 3\sin^2\theta$	$P_3^2 = 15\cos\theta\sin^2\theta$
m=±3				$P_3^3 = 15\sin^3\theta$

Recall that our solutions to the full Schrödinger equation for the Rigid Rotator are of the form

$$Y(\theta,\varphi) = \Theta(\theta)\Phi(\varphi)$$

Combining the Θ and Φ solutions we then have

$$Y_l^m(\theta,\varphi) = N_{lm}P_l^{|m|}(\cos\theta)e^{im\varphi}$$

From the properties of the Associated Legendre functions and from our normalization of the Φ equation one can show that the normalization constant is

$$N_{lm} = \left[\frac{(2l+1)}{4\pi} \frac{(l-|m|)!}{(l+|m|)!} \right]^{\frac{1}{2}}$$

The Rigid Rotator wave functions can then be written:

$$Y_l^m(\theta,\varphi) = \left[\frac{(2l+1)}{4\pi} \frac{(l-|m|)!}{(l+|m|)!} \right]^{\frac{1}{2}} P_l^{|m|}(\cos\theta) e^{im\varphi}$$

Recall that these functions are called **Spherical Harmonics.**

From the definition of the associated Legendre polynomials one finds that the quantum number *m* can only go as high as ±*l*. Thus $m = 0, \pm 1, \pm 2, \ldots, \pm l$ We will derive this explicitly later in the course.

<u>Rigid Rotor Wave Functions</u>

The first few spherical harmonics are

	l=0	*l*=1	*l*=2
m=0	$Y_0^0 = \frac{1}{\sqrt{4\pi}}$	$Y_1^0 = \sqrt{\frac{3}{4\pi}} \cos\theta$	$Y_2^0 = \sqrt{\frac{5}{16\pi}} (3\cos\theta - 1)$
m=+1		$Y_1^1 = \sqrt{\frac{3}{8\pi}} \sin\theta e^{i\varphi}$	$Y_2^1 = \sqrt{\frac{15}{8\pi}} \cos\theta \sin\theta e^{i\varphi}$
m=-1		$Y_1^{-1} = \sqrt{\frac{3}{8\pi}} \sin\theta e^{-i\varphi}$	$Y_2^{-1} = \sqrt{\frac{15}{8\pi}} \cos\theta \sin\theta e^{-i\varphi}$
m=+2			$Y_2^2 = \sqrt{\frac{15}{32\pi}} \sin^2\theta e^{i2\varphi}$
m=-2			$Y_2^{-2} = \sqrt{\frac{15}{32\pi}} \sin^2\theta e^{-i2\varphi}$

As the energy is given by:

$$E = \frac{\hbar^2}{2I} l(l+1) \qquad l = 0,1,2,\ldots$$

and does not depend upon *m* there is some degeneracy in that different eigenfunctions will have the same energy.
Thus, each column represents a set of degenerate functions. Think about the physical interpretation of these functions in terms of probabilities. What do they mean?

These functions form an orthonormal set. The orthonormality of these eigenfunctions is expressed by

$$\int_0^{2\pi}\int_0^{\pi} Y_l^m(\theta,\varphi)^* Y_l^m(\theta,\varphi) \sin\theta \, d\varphi \, d\theta$$

It is important to note the $\sin\theta$ in the integral and understand where it comes from. The volume element in spherical polar coordinates is $dx\,dy\,dz = r^2 \sin\theta\, dr\, d\theta\, d\varphi$. r is a constant for the rigid rotator. Integration of the wave function over r must just yield 1, since there must be unit probability of finding the particle at some r. Therefore the orthonormality integral reduces to an integral over only θ and φ. The θ and φ part of the volume element is $\sin\theta\, d\theta\, d\varphi$. Physically this represents the differential element of surface area of a sphere of unit radius. This is where the name *spherical harmonics* arises.

4.5 Spectroscopic Implications of the Rigid Rotor Energy Levels

Let's now consider implications of the energy eigenvalues:

$$E = \frac{\hbar^2}{2I} l(l+1) = Bl(l+1) \qquad l = 0,1,2,3,\ldots$$

Here $$B = \frac{\hbar^2}{2I} = \frac{\hbar^2}{2\mu r^2}$$

is known as the rotational constant and characteristic for every molecule.

You can see that the energies are independent of the *m* quantum number. This means that there is degeneracy.

The first level (*l*=0) occurs at an energy of 0. The second level occurs at 2*B*. The next at 6*B*. This is shown in the figure below.

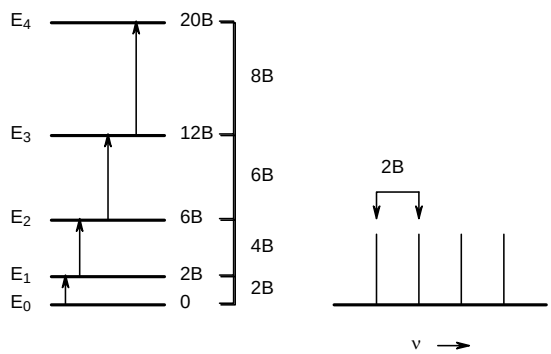

Energy Levels Spectrum

In considering how a rigid rotator interacts with light, we must consider the selection rules, just as we did for the harmonic oscillator. In the course "Spectroscopy" we will show that transitions between rotational levels must follow *the selection rule* $\Delta l = \pm 1$, similar to the Harmonic oscillator problem.

As we will then also see that in addition to this selection rule, a molecule must possess a *permanent dipole moment* to undergo a transition from one rotational level to another. Thus, homonuclear diatomic molecules will not show a pure rotational spectrum because they do not have a permanent dipole moment.

Using the selection rule one finds for the energy differences:

$$\Delta E = E_{l+1} - E_l = B(l+1)(l+2) - Bl(l+1)$$

$$= 2B(l+1)$$

where we have designated *l* as the quantum number of the lower level.
So the first transition is at a frequency corresponding to 2*B*, the second at 4*B*, third at 6*B*, etc.

In the rigid rotator approximation, we expect transitions to be equally spaced by units of 2*B*. Deviations from this approximation will show up as transitions that are not quite equally spaced.

From the value of *B* measured spectroscopically, one can determine the moment of inertia and hence the equilibrium bond length since $I = \mu r^2$.

For $H^{35}Cl$, for example *B* is about 10.6 cm^{-1}. This value of *B* would yield a bond length of 1.29Å. The most accurate geometries of molecules are determined from microwave spectroscopy.

I would like to now return to our discussion of the rigid rotor (and 3-dimensional systems in general) and consider the subject of angular momentum in more detail.